LS-615 Laser System
Operating Manual

QUANTUM COMPOSERS, INC
PO Box 4248
Bozeman, MT 59772
(406)582-0227 phone
(406)582-0237 fax
www.quantumcomposers.com

Contents

1. Introduction

This manual contains the information necessary to operate and maintain the Quantum Composers LS615 series laser system. It provides information for setup and installation, operation, service, preventive maintenance, and troubleshooting (fault isolation). Generally, each topic has its own section and no section assumes knowledge of information from other sections.

Technical Support

For questions or comments about operating the LS-615 our technical staff can be contacted via one of the following methods:

- Phone - (406) 582-0227
- Fax - (406) 582-0237
- Internet - www.quantumcomposers.com

Warranty

The LS-615 has a one-year limited warranty from the date of delivery. This warranty covers defects in materials and workmanship. Quantum Composers will repair or replace any defective unit. Contact us for information on obtaining warranty service.

Package Contents

The box you receive should contain the following:

- LS-615 Laser System Payload
- LS-615 Laser System 2U Rack Mounted Power Supply
- Umbilical Cable – 5 meter long
- AC Power Cord (for country of use)
- User's Manual and Control Software on Disk
- Toolkit

Contact Quantum Composers (406) 582-0227 if any parts are missing.

2. Safety

This user's manual contains the technical information needed to properly install, operate, and maintain the LS-615 laser system. It provides instructions for setup and installation, operation, service, preventive maintenance, and troubleshooting (fault-isolation). The laser system consists of two major subassemblies:

1. The Payload, which consists of two stages, a laser, laser optics, and all supporting control circuits.
    a. Note – user must install camera. Cables are supplied for camera link and power inside the payload.
2. The Power Supply, which consists of a 2U rack mounted box. (Connect the two with an unsupplied Umbilical Cable)

The laser system is truly "turn-key" and has been shipped fully functional. Only minor adjustments are necessary after installing the objective lenses to operate the system. The umbilical connections are sized and keyed to increase the simplicity of installation.

Caution labels, in accordance with CDRH and CE requirements, are prominently displayed on the Laser Optical Assembly and Laser Power Supply. The maximum ratings indicated on the system labels are in excess of the normal operating parameters. Please refer to the Data Summary Sheet for specific information pertaining to your system.

The laser system produces laser radiation, which is hazardous to eyes and skin, can cause burning and fires and can vaporize substances. The safety chapter contains essential information and user guidance about these hazards.

This product complies with safety standards EN61010:1993+A2:1995, EN60825:1994+A11:1996, and CDRH21 CFR 1040.10(d). Do not install substitute parts or perform any unauthorized modification to this product. Return the product to manufacturer for service or repair to ensure that all safety features are maintained.

Do not operate this product beyond its specifications.

SYMBOL	DEFINITION OF SYMBOL
	CAUTION: Calls attention to a procedure, practice, or condition that could cause damage to the product, or cause bodily injury to the user. Refer to accompanying documentation. ATTENTION: Ce symbole signale une procédure, une méthode ou une condition qui peut endommager le produit ou blesser l'utilisateur. Se référer à la documentation jointe. ACHTUNG!: Beachten Sie Verfahren, Praktiken oder Zustände, die das Produkt beschädigen oder zu Verletzungen fuhren können. Lesen Sie die deigefugte Dokumentation. ATTENZIONE: Porre estrema cautela alla procedura, uso o condizioni che potrebbero danneggiare il prodotto o l'utilizzatore. Far riferimento alla documentazione inviata insieme al prodotto. ADVERTENCIA: Llamar la atención de un producto, practica, o estado que puede causar daño al producto o puede herir el usario.

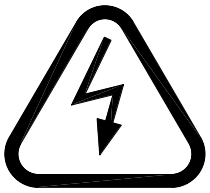	CAUTION: Risk of Electric Shock. ATTENTION: Risque d'éléctrocution. ACHTUNG!: Gefahr durch Stromschlag. ATTENZIONE: Rischio di shock elettrico. ADVERTENCIA: Riesgo de choque eléctrico
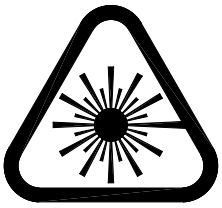	CAUTION: Risk of exposure to hazardous laser radiation. ATTENTION: Risque d'exposition à un rayonnement laser dangereux. ACHTUNG!: Gefahr durch gefährliche Laserstrahlung. ATTENZIONE: Rischio di esposizione a pericolose radiazioni laser. ADVERTENCIA: Riesgo de exposición a radiaciên láser peligrosa.

Laser Safety

VISIBLE AND/OR INVISIBLE LASER RADIATION

CAUTION: The LS-615 Laser System is a Class 4 OEM laser. Its output beam is, by definition, a safety and fire hazard. Precautions must be taken to prevent accidental exposure to both direct and reflected beams.

Precautions for Safe Operation of Class 4 OEM Lasers:

- Keep the protective covers on the Laser Head as much as possible. Do not operate the laser with the covers removed for any reason.
- Avoid looking at the laser output beam.
- Do not wear reflective jewelry while using the laser, as it might cause inadvertent hazardous reflections.
- Use protective eyewear at all times. Consult the ANSI, ACGIH, or OSHA standards listed at the end of this section for guidance on goggles and safety matters.
- Operate the laser at the lowest possible beam intensity, given the requirements of the intended application.
- Increase the beam diameter wherever possible to reduce beam intensity and thus reduce the hazard.
- Avoid blocking the laser beam with any part of the body.
- Use an IR detector or energy detector to verify that the laser beam is off before working in front of the laser.
- Establish a controlled access area for laser operation. Limit access to those trained in the principles of laser safety.
- Maintain a high ambient light level in the laser operation area so the eye pupil remains constricted, thus reducing the possibility of hazardous exposure.

- Post prominent warning signs near the laser operation area.
- Provide enclosures for the beam path whenever possible.
- Set up an energy absorber to capture the laser beam, preventing unnecessary reflections or scattering.

CAUTION: Use of controls, adjustments or performance of procedures other than those specified in this User's Manual may result in hazardous radiation exposure.

- Follow the instructions within this manual carefully to ensure the safe operation of your laser. At all times during laser operation, maintenance, or servicing, avoid unnecessary exposure to laser or collateral radiation that exceeds the accessible emission limits listed in "Performance Standards for Laser Products," United States Code of Federal Regulations, 21 CFR 1040.10(d). This information is also available in EN60825-1:1994, Section 8.2, titled “Measurements of Laser Radiation for Determining Classification.”
- Preventative Maintenance for Safety
- Preventative maintenance is required to ensure the laser remains in compliance with Center for Devices and Radiological Health (CDRH) Regulations and European Norm (EN) requirements. This laser product complies with Title 21 of the United States Code of Federal Regulations, Chapter 1, Subchapter J, Parts 1040.10, as applicable, and with EN60825-1:1994, Part 1 for a Class 4 laser, as applicable. To maintain compliance, verify the operation of all features listed below, either annually or whenever the product has been subjected to adverse environmental conditions, which may have affected these features and functions.
- Verify that removing the remote interlock connector prevents laser operation. This connector is located on the rear panel of the Laser Power Supply.

Verify that a time delay exists between turning on the main power and the start of laser firing. It must give enough warning to allow action to be taken to avoid exposure to laser radiation.

Safety Issues

Normal use of test equipment presents a certain amount of danger due to electrical shock because it may be necessary for testing to be performed where voltage is exposed.

An electrical shock causing 10 milliamps of current to pass through the heart will stop most human heartbeats. Voltage as low as 35 VDC or 35 V_{RMS} AC should be considered dangerous and hazardous, as it can produce a lethal current under certain conditions. Higher voltages pose an even greater threat because such voltage can easily produce a lethal current. Your normal work habits should include all accepted practices that will prevent contact with exposed high voltage and steer current away from your heart in case of accidental contact with a high voltage. You will significantly reduce the risk factor if you know and observe the following safety precautions:

- If possible, familiarize yourself with the equipment being tested and the location of its high-voltage points. However, remember that high voltage may appear at unexpected points in defective equipment.

- Do not expose high voltage needlessly. Remove housing and covers only when necessary. Turn off equipment while making test connections in high- voltage circuits. Discharge high-voltage capacitors after shutting down power.
- When testing AC powered equipment, remember that AC line voltage is usually present on power input circuits, such as the on-off switch, fuses, power transformer, etc.
- Use an insulated floor material or a large, insulated floor mat to stand on, and an insulated work surface on which to place equipment. Make certain such surfaces are not damp or wet.
- Use the time-proven “one hand in the pocket” technique while handling an instrument probe. Be particularly careful to avoid contact with metal objects that could provide a good ground return path.

Never work alone. Someone should always be nearby to render aid if necessary. Training in CPR first aid is highly recommended.

Electrical Safety

CAUTION: Both the Laser Optics Assembly and Laser Power Supply contain electrical circuits operating at lethal voltage and current levels. Always unplug the system Mains connection and wait at least one (1) minute to allow capacitors to discharge before servicing any part of the laser system.

Consult with the manufacturer if repair of the laser electronics is required. Only those trained in high voltage, high current electronics, and who understand the laser circuitry, should be allowed to service and repair the laser electronics. If any such action is required, it is recommended that you contact the manufacturer for details.

Sources of Laser Safety Standards
"Safe Use of Lasers" (Z136.1)

American National Standards Institute (ANSI)
11th West 42nd Street
New York, NY 10036 USA
Phone: (212) 642-4900

"A Guide for Control of Laser Hazards"

American Conference of Governmental and Industrial Hygienists (ACGIH)
6500 Glenway Avenue, Bldg. D-7
Cincinnati, OH 45211 USA
Phone: (513) 661-7881

Occupational Safety and Health Administration

U.S. Department of Labor
200 Constitution Avenue N.W.
Washington, DC 20210 USA
Phone: (202) 523-8148

“Safety of Laser Products” (EN60825-1:1994)
Global Engineering Documents
15 Iverness Way East
Englewood, CO 80112-5704 USA
Phone: (303) 792-2181

Safety Labels and Locations

The following figures show the safety, model number, serial number and origination labels, and their locations on the LS-615 Laser System. These labels are installed at the factory and should not be removed by the user. If for some reason a label is removed, obscured or damaged in any way, please contact the manufacturer for a replacement.

Figure 1 Model, Serial, and Origination Label

Figure 2 Radiation and Aperture Labels

Figure 3 Certification & ID Label

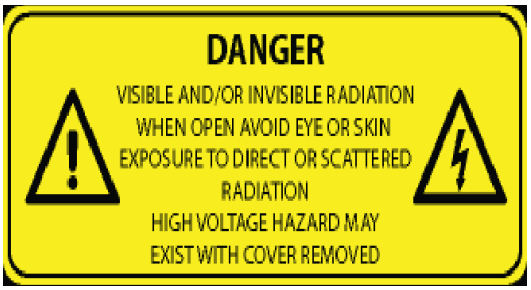

Figure 5 Laser Exposure

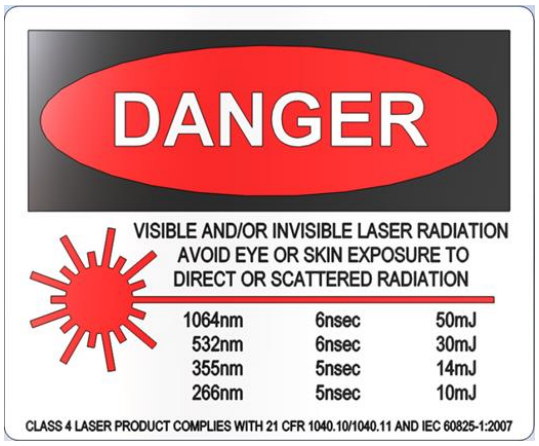

Figure 4 Laser Wavelengths

Figure 6 Laser Aperture

3. System Overview

LS-615 Block Diagram

Figure 7 shows the laser system block diagram, which consists of the Jewel Laser, an Auto Focus module, the laser optic modules, the System Power Supply, and an X and Z axis stage assembly.

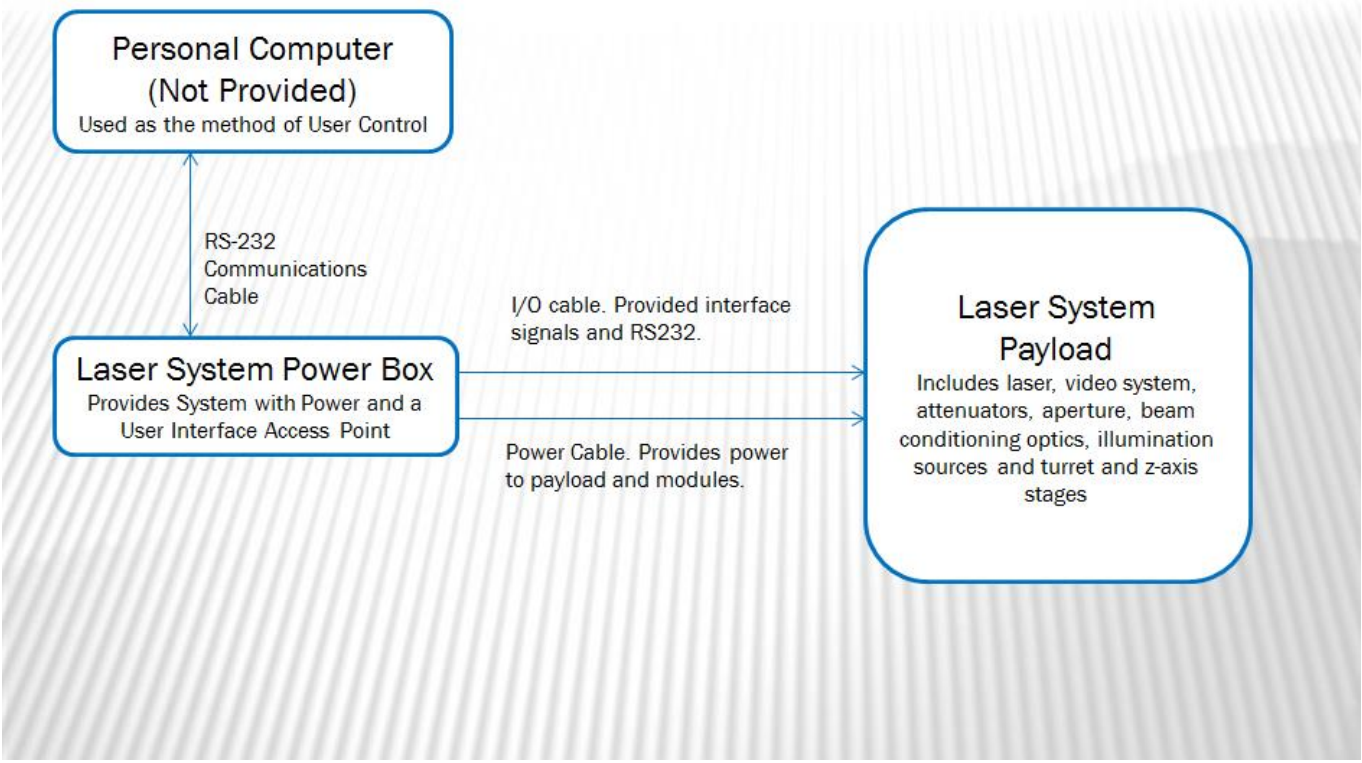

Figure 7 System Block Diagram

Description of Power Supply

The 2U rack mounted power supply box contains three AC/DC converters to supply all needed voltages for the LS-615 system from one AC supply. The main source can be 100-250 VAC and 50-60 Hz. The power supply box has a set of air-cooling fans that operate when the main power is turned on. This box also contains the input ports for RS-232 communications from a user supplied computer, two external triggers, an external interlock, and a sync out signal.

Figure 8 Power Supply (front view)

Figure 9 Power Supply (Connections)

Description of Payload

The LS-615 payload contains multi-wavelength laser optics assemblies for beam control, the Jewel laser head, a video assembly, a beam combining assembly, the payload system controller, and a stage controller. The laser head includes a 1064nm laser with an attached nonlinear module which converts the 1064nm (IR) laser output to 532nm (GRN). The laser features a ruggedized sealed housing designed for ease of maintenance and reliable operation. The laser beam control optics modify the output of the laser head providing wavelength selection, energy control, beam sizing, and beam shaping. The laser beam is then combined with the video in the beam combiner assembly and delivered to the objectives. The beam combining assembly combines the video, a field light source, autofocus, and the laser beam into a common collinear output. The payload also contains a Laser System Control (LSC) card, which provides an interface to the user and control of all the motorized optic modules contained within the payload.

Description of the Jewel Laser

The Jewel is an air-cooled 1064 nm diode pump laser with output power up to 10 mJ. The Jewel is a self-contained laser housing the diode and Q-switch driver.

Description of the Axis Stage Assembly

The LS-615 system contains two user controllable axes. The Turret (or X-axis) allows the user to quickly change objectives. The Z-axis moves the objectives up/down to maintain the correct focus. This can be done manually or with the aid of the installed Quantum Composers Auto Focus module.

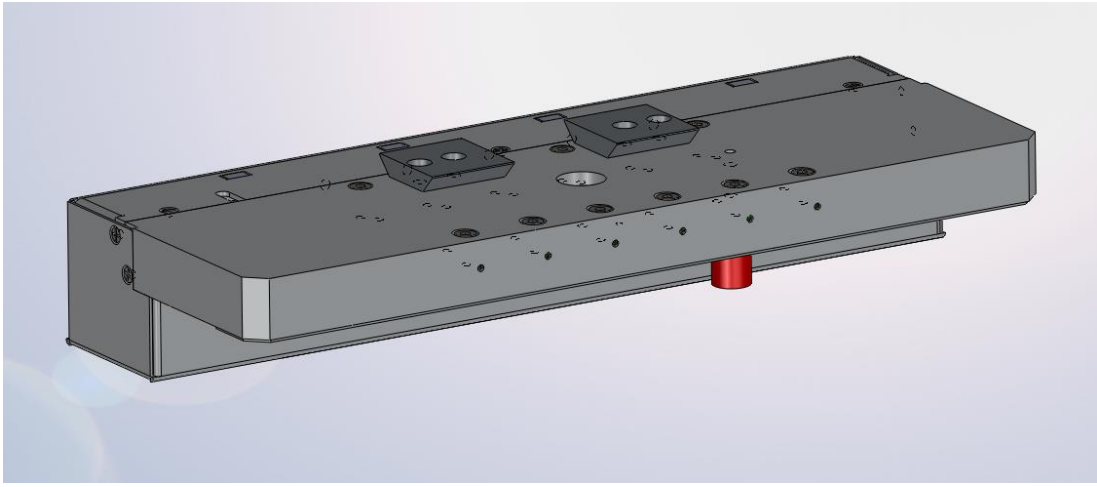

Figure 10 Lens Changer Module - 4 positions

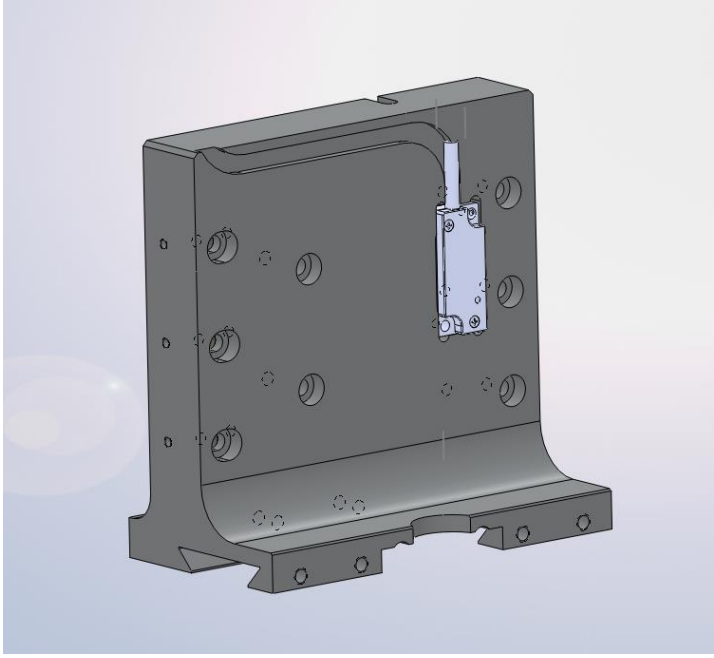

Figure 11 Z-axis Module

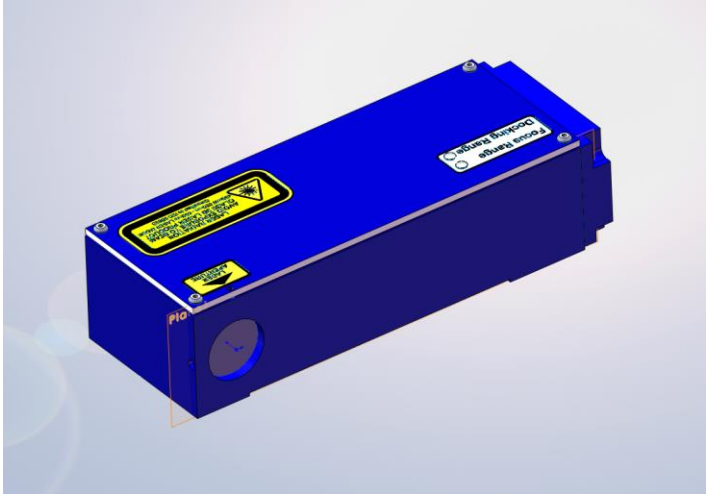

Figure 12 AutoFocus Module

Laser Optic Assemblies

The laser optic assemblies (shown in figure 13) are quickly explained below.

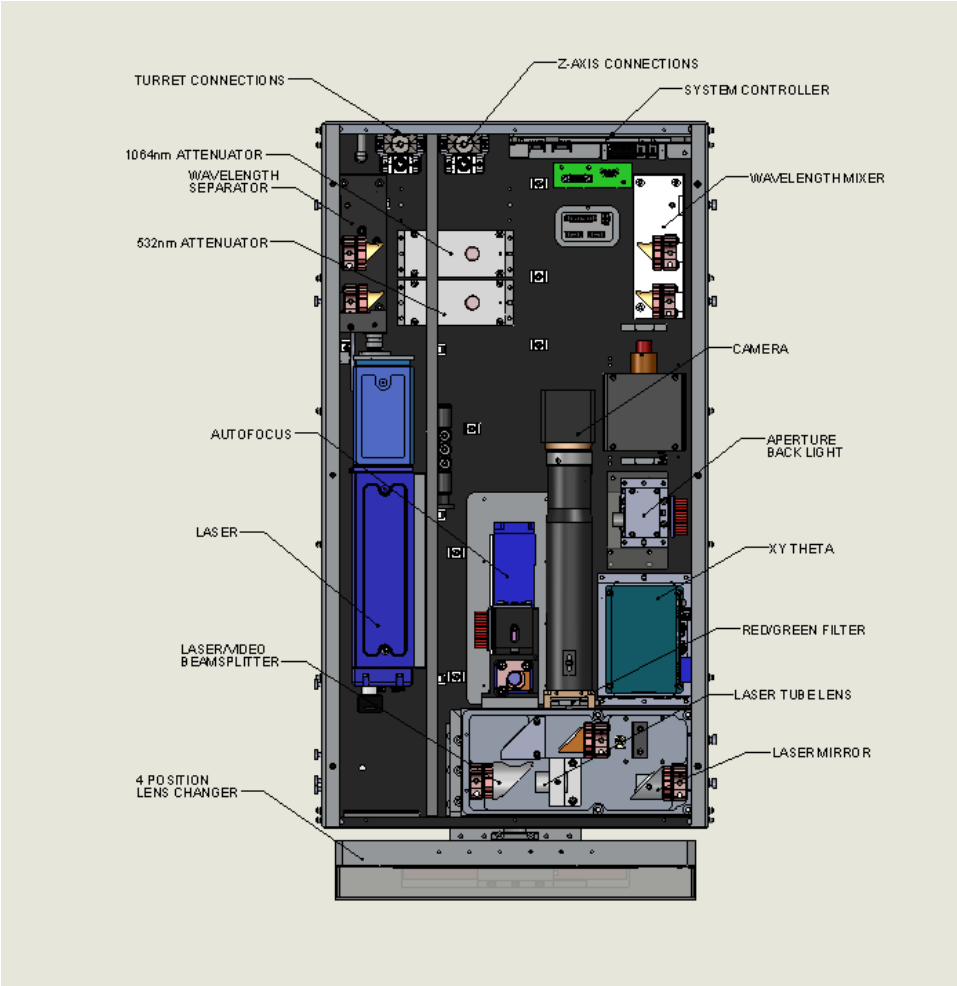

Figure 13 Laser Optical Assembly

1. The laser resonator is a diode pumped laser with an output wavelength of 1064 nm and nonlinear module to separate the 1064 nm into a few key harmonic wavelengths. The monolithic structure is machined from a single block of stress-relieved aircraft grade aluminum. Resonator mirrors are hard-mounted to the machined resonator bench, which results in an extremely stiff, rugged resonator which is much less sensitive to misalignment then standard lasers resonators. The output of the laser enters the integral nonlinear module. Harmonic generation is performed using non-linear crystal(s). The crystal temperature is tightly regulated by mounting them inside a temperature controlled oven assembly. The laser head has a nonlinear optic (NLO) crystal mounted inside a nonlinear module. The output is collinear, with all wavelengths exiting the same aperture.

2. As the laser beam leaves the laser aperture the beam comes to the harmonic separator mirrors. These mirrors separate the beam into its separate wavelengths and folds the individual beams into independently controlled laser energy attenuators.

3. At this point the laser output can be attenuated as necessary to provide the required energy. The attenuators are designed with a wave-plate/polarizer to provide motorized attenuation of the laser beams from 0-100% of the full energy at the given wavelength. Stepper motors with precision all metal gear heads are used to provide reliable, repeatable

attenuation. The attenuators are also designed with built-in encoders to provide closed-loop motor control. These types of motor are also used on the XY slit assembly that is discussed later.

4. After exiting the attenuators the individual beams are recombined by harmonic mixing mirrors.

5. Once combined back into a single beam the output is feed into the beam conditioning module. The beam expander then enlarges the beam to overfill the XY slit. This ensures the cuts made by the LS-615 system are clean and uniform.

6. The laser beam passes through the slit backlight. The system controller prevents the slit backlight from illuminating the aperture when the laser is firing.

7. The laser beam illuminates the XY Theta aperture. The XY Theta aperture forms a rectangular shape and each axis is independently controlled. The rectangular shape can be rotated +/-45 degrees from horizontal.

8. The beam is then folded into the beam combiner module where a lens images the XY aperture at infinity. After which the module combines the video, illumination, autofocus, and the laser beam. The resultant is then sent to the infinity corrected objective.

9. All of these optical elements are kept in accurate relative alignment through precision mounting techniques to a stiff and stable optical bed structure. The opto-mechanical design for the laser optic assemblies is based on years of experience in the design of stable, robust laser systems. Adjustable mirrors are kept to the minimum to achieve alignment, thus minimizing the risk of misalignment.

10. The 4 position lens changer holds 4 infinity corrected microscope objectives. The mounting interface is an M26x36 thread. As viewed in Figure 10, objective positions run, right-to-left, 1 through 4. Position 1 is on the right and position 4 is on the left. NOTE – The lens changer accommodates 1 large diameter objective such as Mitutoyo® HR series. This lens must be placed in position 4 of the lens changer.

4. Installation

Unpacking the Laser System

The laser system has been carefully packaged for shipment. If the container arrives damaged in any way, please contact the shipper's agent to be present for the unpacking. Inspect each unit as it is unpacked, looking for dents, scratches, or other damage. If damage is evident, immediately file a claim against the carrier and notify the manufacturer.

It is recommended that the shipping container be kept for possible further shipping purposes, should the unit require repair or maintenance services. If a damage claim has been filed, the container will be needed to prove shipping damage.

The laser system is a turnkey system, designed so that a field service engineer is not required to get the system up and operating properly. The system has undergone extensive testing to verify its conformance to the specifications prior to delivery.

Before operating the laser however, it is important to fully understand its main features and controls.

CAUTION: Do not power up the system before thoroughly reading the system description. Use of the controls or adjustments, or performance of procedures other than those specified in this user's manual my result in hazardous radiation exposure, laser system damage or result in voiding the warranty. Please refrain from connection the main power until you make sure the power switch is in the OFF position.

System Inventory

The LS-615 system consists of the following items. Verify that all listed items are present in the shipping container. If there are any shortages or discrepancies, contact Quantum Composers immediately.

- Payload
- 2U Rack Mounted Power Supply
- Umbilical Cable Set
- Power Cord
- User's Manual and Control Software on Disk
- Acceptance Test Results

System Installation

CAUTION: When utilizing the Remote Interlock capability, use an isolated contact closure such as a relay to avoid generating undesirable ground loops.

CAUTION: Ensure that the system is connected to the proper Mains voltage. The voltage rating is marked on the Laser Power Supply back panel. Operating the system at the incorrect voltage may result in damage to the unit.

CAUTION: Ensure that the Mains power outlet that the Laser Power Supply connects to is properly grounded. Poor ground quality could result in exposure to electrical shock.

PAYLOAD SETUP

CAUTION: Do not use turret as a handle when carrying the payload.

CAUTION: Do not rest payload on turret.

1. Remove payload from packaging and lift onto stage interface plate. Brackets on the back of the payload hook on a lip of the stage interface plate (see Detail B, Figure 14, - plate not included w/ payload). A dowel pin in the bracket locates the payload on the stage interface plate.
   The payload mounting brackets have M6 threaded holes (6 – 10mm thread depth) for securing.
   NOTE – tighten upper screws before lower screws to ensure the reference brackets remain in contact w/ stage interface plate.

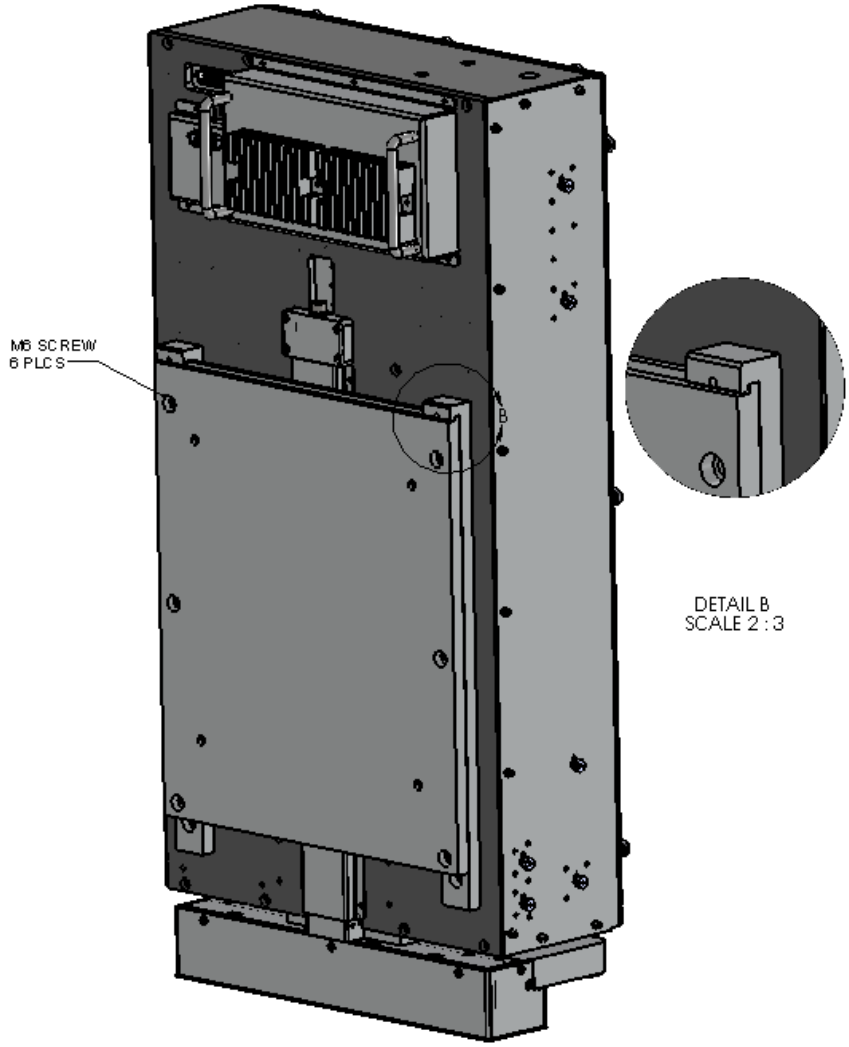

Figure 14 Payload Mounting

2. Remove turret shipping lock from 4 position lens changer.

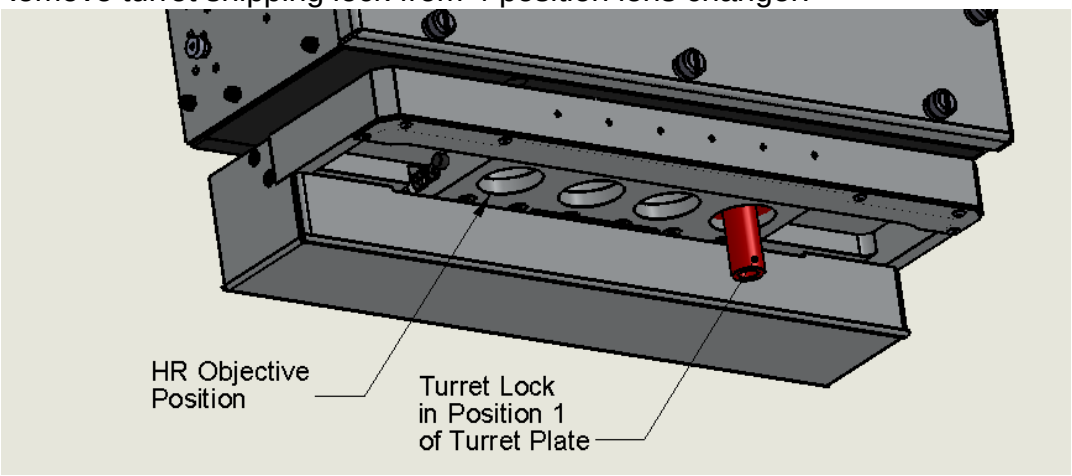

Figure 15 Laser Lens Changer - 4 Positions

3. Install microscope objectives in laser lens changer. Install the HR objective first. Install remaining objectives using supplied objective tool.

Position 1 – 2x
Position 2 – 10x
Position 3 – 20x
Position 4 – 50x NIR-HR

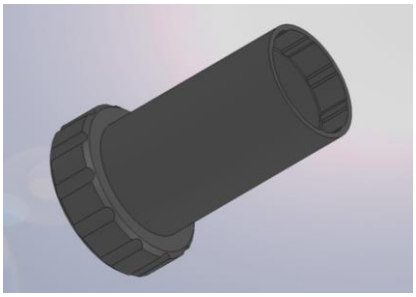

Figure 16 Objective Tool

4. Adjust the z-axis preload if necessary. The Z-axis should, with all objectives loaded, be near the middle of travel or slightly above the middle and move freely. A ratcheting wrench from the tool kit can be used to adjust the preload. Turning clockwise increases the lift force and counter-clockwise lowers the lift force. NOTE: do not adjust so that the z-axis is at the bottom or top of travel with the power turned off. If so, the stage may not initialize correctly.

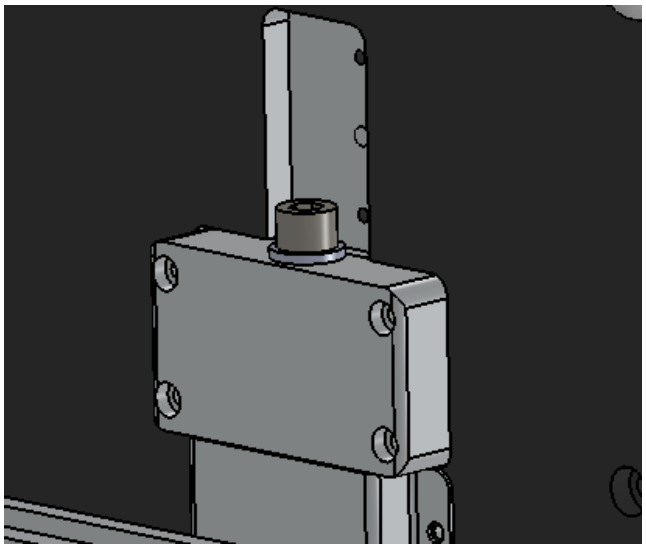

Figure 17 Z-axis Preload Adjusting Screw

5. Attached cabling to laser payload. Connections are unique so they cannot be incorrectly mated. Secure the locking screws. Do not turn power on at this time.

6. Attach camera to video tube C-mount. Video tube c-mount can be removed if necessary. A camera link cable and 12vdc camera power cable are located in the payload. Camera can be rotated with C-mount to align with gantry stage.

Figure 18 Camera Link Cable & Camera Power

POWER SUPPLY SETUP

1. Slide the 19” rack mount power supply into a suitable rack.
2. Attach cabling to back of power supply

   Umbilical – 2 cables
   RS-232
   Power - 110/220VAC IEC Plug

Figure 19 Power Supply Connections

INITIAL POWER ON

Power-On Checklist

- ☐ Verify cable connections are correct.
- ☐ Verify the z-axis is not at either end of travel (must be floating).

Turn on system power.

1. The turret and z-axis will initialize. The motor controller needs to move the motor a small amount to determine the motor location relative to the motor magnets. This is not possible when the motor is at either end of travel as one of the limits will be tripped, preventing movement.
2. The turret will enter the HOME procedure after it is initialized. In the HOME routine, the objectives move to the left until the turret contacts the sensor. The turret then moves to position 1.
3. The z-axis will enter the HOME routine after it is initialized. In the HOME routine, the z-axis will move up to the top of physical travel. It will then move to the Home Offset (command ;LC:ZPH ###).
4. The laser 2nd harmonic crystal will warm up to the set temperature. This takes approximately 10 minutes. The laser will can be operated in during this warm-up period but will suffer from reduced performance.
5. The attenuators will independently home upon power up.
6. The XY Theta aperture will home upon power up.

The system will be ready to operate after approximately 2 minutes. Best laser performance will require another 8 minutes of warm-up time.

5. Laser Operation

The laser system has undergone extensive testing to verify its conformance to the specifications prior to delivery.

Once the laser system has been set up as outlined in the previous chapter, it is ready to operate. Turn ON the Laser Power Supply. After approximately 2 minutes, the laser system is initialized and ready for operator control.
NOTE: Laser harmonic crystals must warm up. This can take 10 minutes before stable output energy can be realized.

Manual Operation

Manual operation should be done via computer as described below. The Laser Power Supply has been pre-configured for operation in the LS-615 Laser System. For a description of the various controls see the communications section.

CAUTION: Manual operation should only be done by trained service technicians. Control of the laser should normally been done using the master controller interface. Failure to properly set all modules before firing the laser can result in damage to the system.

CAUTION: Below is a list of guidelines, which apply to all Quantum Composers' laser systems. These guidelines should be followed whenever possible to avoid laser damage.

- Operate the laser in a dust-free environment and keep the Laser Optics Assembly covered when not in use. This protects the output aperture against dust and particulate.

- The Laser Optics Assembly is sealed with careful attention to use of low outgassing materials. Silicone and similar sealing, bonding or insulating materials should not be used in close proximity to the Laser Optics Assembly since these substances will outgas and could contaminate the output window, causing laser damage.

- Avoid back reflections. Back reflections of even a small percentage of the output energy can promote damage to optical components in the Laser Head. For example, an uncoated convex lens or a glass disk calorimeter will reflect about 4% of the incident energy. While the reflection may seem harmless, it can perturb the resonator operation to the extent that the near field beam intensity profile is degraded and may promote optical damage. It may also affect the resonator hold-off, which can cause pre-lasing and catastrophic optical damage. In some cases, even anti-reflection coated glass optics can reflect enough energy to promote damage to laser optics. It is best to use only quality optics coated for the operating wavelength.

CAUTION: To avoid laser damage, minimize back reflections of the output beam. When reflections are unavoidable, direct them away from the optical axis of the system by canting the optics off-axis. Failure to do so can cause laser damage

and void the warranty.

6. System Operation

LS-615 Communication Application

A software communication application has been included on the System Disk that can operate and set all the functions of the LS-615 laser system. This communication application communicates with the LS-615 via an RS-232 serial interface with the Laser System Controller.

Getting Started

- Attach a serial cable from the RS-232 port of the computer to the “Comm In” serial port on the Laser System Power Supply Box.
- Start the LS61x software.
- The LS-615 application startup screen will be displayed as shown in **Error! Reference ource not found.**. This application has been designed as a graphical user interface for ease of use. There is a Command Terminal section that can be used as well in order to manually send and receive commands to the laser system.
- The software allows you to run the basic functions of the laser system. From this screen the user can pick laser wavelength, energy level, firing mode, frequency, adjust aperture size, illumination levels, select microscope objective positions, move focus axis and control the autofocus.
- The software also provides a system status indicator for the major interlocks and faults.
- The main window has a Command Terminal section. This area allows the user to enter a command and press Send or Enter key. The large area shows the command that was sent and the response. The large area also shows the commands and responses from controls in other portion of the Graphical User Interface (GUI).

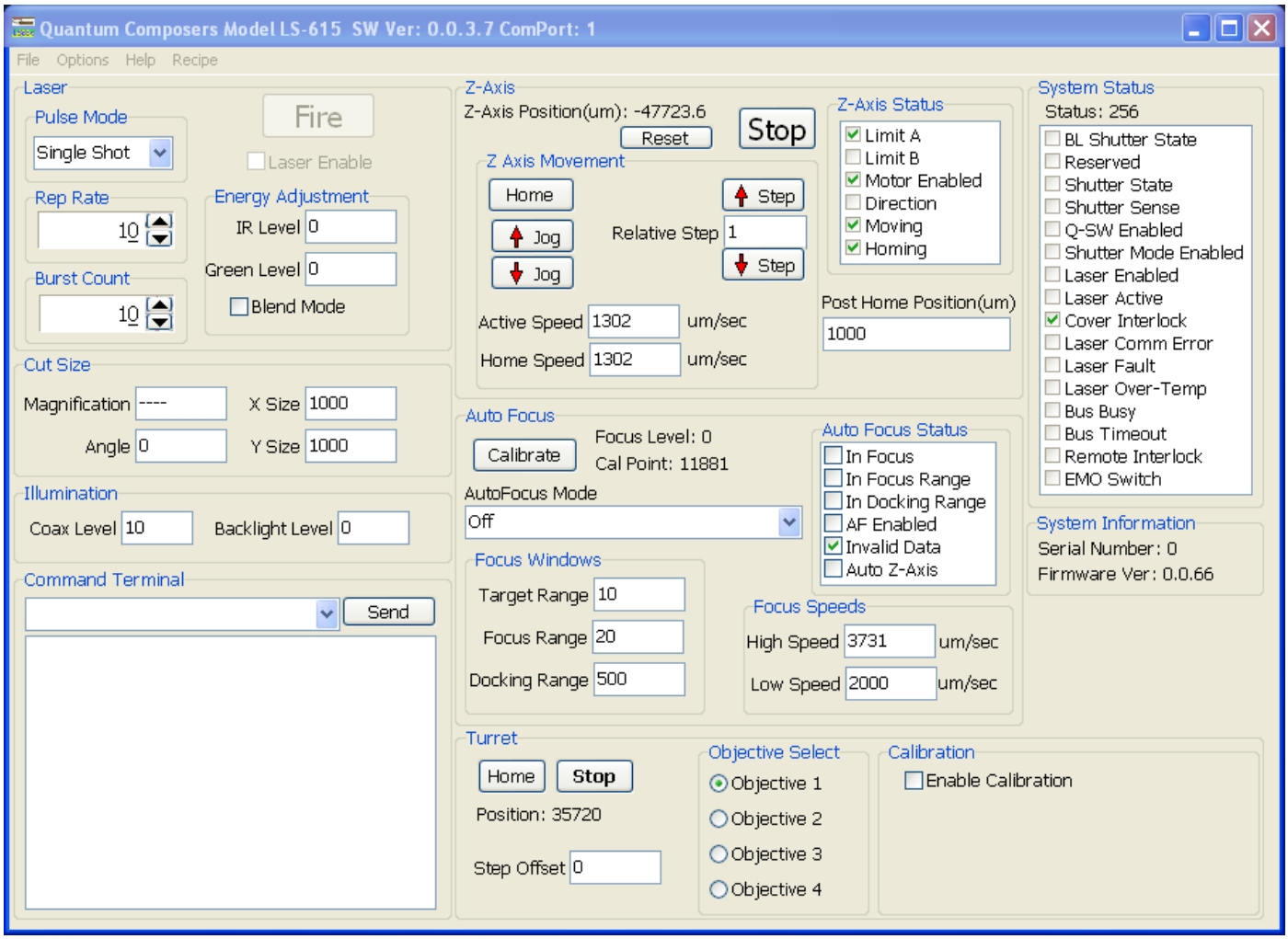

Figure 20 LS61x Software Application Opening Screen

LASER CONTROL

The user is responsible for ensuring the proper laser objective is in place before firing the laser. Failing to do so can result in damaging coatings on the non-laser objectives.

1. Pulse Mode – Options are continuous, single shot or burst.
    a. Continuous mode – The laser will fire continuously from the time the Fire button is pressed until the Stop button is pressed. The pulses per second are controlled with the Rep Rate parameter.
    b. Single Shot – The laser will output 1 single laser pulse when the Fire button is pressed.
    c. Burst mode - The laser will output the number of laser pulses specified by the Burst Count parameter. The laser will stop firing at the end of the burst.
2. Fire button – Selecting the fire button will start laser output. NOTE: the laser must be enabled before the Fire button becomes active.
3. Energy Adjustment – Range for each wavelength is 0 to 1000 (0 to 100.0%).
   NOTE: The software uses the blend command. The combination of the 2 wavelengths has a maximum value of 1000 (100.0%). When in blend mode, and the total exceeds 1000 (100.0%) the wavelength not being adjusted will be scaled down accordingly. When not in blend mode, the inactive (one not being adjusted) wavelength will be set to zero.

CUT SIZE

The cut size value is measured at the sample. A 2500µm aperture opening with a 50x microscope objective has a cut size of 50.00µm.

1. Magnification – specified magnification of microscope objective being used.
2. X-size & Y-size – value corresponds to image size which is determined by the aperture size (range 0 to 2500µm) divided by the microscope objective magnification.
3. Angle – Values are + or – a range of 0 to 450 (45.0 degrees). Positive values rotate the aperture clockwise, Negative values rotate the aperture counter-clockwise. A "-" must be entered for the aperture to rotate in the counter-clockwise direction.

ILLUMINATION

The LS61x is configured with 2 illuminators. One illuminator, coaxial, is for the video and the 2nd illuminator is used to show the XY-Theta aperture.

1. Coax Level – values are 0 to 1000 (0 to 100.0%).
2. Backlight Level – values are 0 to 1000 (0 to 100.0%). Setting the backlight to any non-zero value will move a mirror into the beam path and turn on the light source. The laser controller will stop the laser if it is currently firing. If the mirror is in the beam path and the laser is enabled, the laser controller will turn off the backlight which removes the mirror from the laser beam path.

Z-AXIS

The Z-Axis provides a method for keeping the sample in focus and to adjust for varying objective focal lengths. The Z-Axis is combined with the Autofocus so some functions may cross over between the two. When the autofocus is in control of the z-axis, the z-axis movement controls will be unavailable.

1. Position. The current z-axis position is displayed in microns. A reset button allows for the user to reset the position to zero. This is useful if the user desires the zero position to be the in focus position.
2. Home. The z-axis is automatically homed (referenced to a limit) on startup, but if it is desired, the z-axis can be manually commanded to home again.
3. Stop. This will stop any z-axis movement.
4. Jog. To continually move the z-axis either up or down, pressing and holding the jog buttons will allow this. Once the button is released, the stage will stop.
5. Relative Step. To consistently move a set number of steps on command, the step function can be used. Enter the desired number of steps (0.1um/step) and press the up or down button to move that number of steps.
6. Speeds. The active speed (currently being used) and the home speed can be adjusted. The active speed is only available when the autofocus is not in control. The speeds are in units of um/second.
7. Post Home Position. This is the position in microns that the z-axis will move to after completing a home sequence. This is useful if you wish the stage to move to a nominal focus point after home.

Autofocus

The Autofocus provides an automatic method for keeping a sample in focus as the payload is moved or if the z-axis has been manually adjusted and focus needs to be found quickly. The autofocus has individual parameters that are associated with each turret objective position. So, for example, when calibrating the autofocus, that calibrate point will be associated with the currently selected turret position.

1. Focus Level. This is a readout that gives a relative indication on how close to focus the sample is. The values in the software will range from -2047 (below focus) to +2047 (above focus). A calibrated focus position will display as zero when in focus.
2. Cal Point. This is a readout of the calibrated focus point on the sensor. A nominal value of 12800 will be displayed on an ideal alignment. This should just be used as a reference.
3. Calibrate. To calibrate the focus position, move the sample in focus by using the z-axis movement controls. Once in visual focus, press the calibrate button. This will set the current sensor reading as focus. This should only need to be done once unless the objective or sample type is changed. This is a stored value.
4. AF Enable. This enables the autofocus. The sensor is active with the diode on. The current position will be updated. This only enables the sensor, not the z-axis control.
5. Auto Z-Axis. This enables control of the z-axis. The autofocus will automatically adjust the z-axis based on the calculated focus position. When this is enabled, the manual z-axis controls are unavailable.
6. Focus Windows. These are values based on the focus level. Each one is a window (+/-) around the desired focus position. These values are used when controlling the z-axis and updating the status values.
    a. Target Range. When the system is out of focus, this is the absolute target amount that the autofocus will try to reach before stopping and setting the in focus status.
    b. Focus Range. A ± range that the focus signal can be within before the In Focus Range condition is set. Motor movement will not be started until the focus signal level is greater than this value
    c. Docking Range. A ± range that the signal can be within before the Docking Range condition is set. When the focus signal is within this window, the stage speed will be reduced to the slower speed. When outside of this window, the high motor speed will be used. This allows the motor to slow down when approaching the target focus so that overshooting does not occur.
7. Focus Speeds. These are the speeds at which the autofocus will use to control the z-axis depending on how close or far away from focus the system is.
    a. High Speed. This is the speed (in microns/second) in which the z-axis will move when the autofocus is outside of the docking range value. This is typically a fast speed to quickly get into position before slowing down to actual focus.
    b. Low Speed. This the speed in which the z-axis will move when the autofocus is inside the focus range and attempting to reach the target focus.

Turret

The turret allows for switching between up to 4 objective lenses quickly and precisely.

1. Home. The turret is automatically homed (referenced to a limit) on startup, but if it is desired, the turret can be manually commanded to home again. After homing, it will then move to position #1.
2. Stop. This will stop any turret movement.
3. Position. This displays the active position of the turret.
4. Objective Select. This selects the objective position to move to. Once selected, the turret will immediately move to that position. The autofocus parameters will also be recalled that are associated with that objective number.
5. Calibration. Calibration is used to reset the positions of each objective. These are nominally set at the factory, but may need to be fine-tuned at the installation site.
    a. Relative Step. This allows fixed step movements either left or right. Each step is 0.1um. Enter the desired movement amount and then press either the left or right movement button until the objective is centered.
    b. Set #. This sets the current position as the new position for that objective number. Step the objective left or right until it is optimally centered, then press the corresponding set number to store.

7. RS-232 Communications

Personal Computer to Laser system Communication

The LS-615 has a standard RS-232 port. All menu settings can be set and retrieved over the computer interface using a simple command language. The command set is structured to be consistent with the Standard Commands for Programmable Instruments (SCPI). Although due to the high number of special features found in the LS-615, many of the commands are not included in the specification. The amount of time required to receive, process, and respond to a command at a Sending commands faster than 50 ms may cause the unit to not respond properly. It is advised to wait until a response from the previous command is received before sending the next command.

RS-232 Interface Overview

The serial port is located on the back of the LS-615 rack mounted power box and uses a 9-pin D-type connector with the following pinout (as viewed from the back of the unit):

1	No Connection
2	Tx - Transmit (to computer)
3	Rx - Receive (from computer)
4	DTR - Connected to pin 6
5	Ground
6	DSR - Connected to pin 4
7	RTS - Connected to pin 8
8	CTS - Connected to pin 7
9	No Connection

The serial port parameters should be set as follows:

Baud Rate	57600
Data Bits	8
Parity	Even
Stop Bits	1

Device Command Format

All commands use ASCII characters and are composed of the following fields:

<Prefix><Address>< Delimiter ><Command String>[Parameters]<Terminator>

Field	Description
Prefix	Single semicolon character ";", must precede all commands. All devices will reset their command input buffer when the prefix is received.
Address	2 ASCII characters. Each device has a unique address which is programmed into its firmware. See the table below for a list of addresses.
Delimiter	Single colon character ":", must follow device address.
Command String	Commands are specific to each device -- see the following sections for the commands that each device supports.
Parameters	(optional field) Some commands may not require a parameter. For Query commands immediately follow the command string with the question mark character "?". For non-query commands immediately follow the command string with a single space character " " followed by the parameter. Multiple commands are separated by commas.
Terminator	ASCII carriage return character (ODh). The receiving device does not process any commands until the terminator is received.

Device Addresses

Address	Device
LC	Laser Controller

Command Types

There are two types of commands -- those that set a value or initiate an action (control commands), and those that request information (query commands). Each device must respond in the proper manner to each type of command.

Control Commands

A device must always parse a control command and return a response immediately.

- If the command is a recognized command and the parameter is valid, then the device returns an "OK<CR>".
- If the command is not recognized, then the device responds with a "?1<CR>".
- If the command is recognized, but the parameter value is missing or invalid, then the device responds with a "?4" or "?5".
- If a control command is received while the device is in the midst of executing a previous command, and the commands are mutually exclusive (cannot be executed in parallel), then the previous command is aborted and the new one executed. It is up to the host controller (the PC) to poll the device and make sure the previous command has finished, if that is needed.

Query Commands

Query commands return a value to the PC as soon as the command is parsed and executed. The value returned will depend on the command. The response is always terminated with a “<CR><LF>”. If a query command is not recognized by the device, then a "?1" is returned.

Error Codes

?1 Command not recognized.
?2 Missing command keyword. If command requires keyword.
?3 Invalid command keyword. If command requires keyword.
?4 Missing parameter.
?5 Invalid parameter.
?6 Query only, command needs a question mark.
?7 Invalid query, command does not have a query function.
?8 Command unavailable in current system state.
?9 Module timeout error

Laser Controller Examples

Below are a couple of example commands and queries. A <CR> indicates the carriage return value appended:

Set laser burst count to 123:

Command to send: ;LC:BC 123<CR>
Response: OK<CR>

Enable laser:

Comma to send: ;LC:EN 1<CR>
Response: OK<CR>

Fire laser:

Command to send: ;LC:FL 2<CR>
Response: OK<CR>

Set Energy

Command to send: ;LC:ED 125<cr> sets energy to 12.5%
Response: OK<CR>

Query system status:

Command to send: ;LC:SS?<CR>
Response: 212<CR> (means laser Q-Switch is enabled, laser is enabled, laser is firing and shutter is open)

General System Commands

EC # EC?	Echo. Parameter = 0=echo characters off (Default: 0), 1=echo characters on. EC? returns echo state.
ID?	System ID – QC, model #, serial # (5 digits), version# (x.x) (ex. QC,LS-615,00101,0.1). Query only.
LR # LR?	Load Recipe. Sets up laser according to requested recipe settings. Parameter = Recipe number (0=factory default, 1-6 User Recipes).
SR # SR?	Store Recipe. Store current settings. Parameter = Recipe number (1-6 User Recipes). A query returns the current active recipe.
SS?	System Status – Query Only. Returns the current system state. Value is a 16 bit decimal value with each bit position corresponding to a system state.

23	22	21	20	19	18	17	16
Reserved	Reserved	Reserved	Reserved	Reserved	Reserved	Ready to Enable	Ready to Fire
15	**14**	**13**	**12**	**11**	**10**	**9**	**8**
EMO	Remote Intlk	Bus Timeout	Bus Busy	Laser Over Temp	Laser Fault	Laser Comm Error	Cover Interlock
7	**6**	**5**	**4**	**3**	**2**	**1**	**0**
Laser Active	Laser Enabled	Shutter Mode Enabled	Qswitch Enabled	Shutter Sense	Shutter State	BL Shutter Sense	BL Shutter State

ST	Stop. This is a global stop to the system. The laser will be disabled, the z-axis stopped and the turret stopped.
VN?	Version Number – Query Only. Returns the current LSC version number in the format of major.minor.release. Ex: 1.3.6

Laser Operation Commands

BC # BC?	Burst Count. Sets the number of laser shots to be fired when firing mode is set to burst. Parameters are from 1-1000. Default is 10. A query will return the currently set burst count.
BL ####,#### BL?	Blend Mode Enable. Allows blending of any of the wavelengths. Parameters = The ED value for each installed wavelengths, in order from the fundamental (IR to DUV). For example in an IR/GRN system the command would be ;LC:BL ####,#### where the first number is the IR ED value and the second number is the GRN ED value. To disable send the Select Wavelength command (SW). Query returns current settings.
ED ### ED?	Set Energy Density as a percentage (##.#%). Parameter = (0 – 1000). Where 1000 (100.0%) equals the wavelength specific maximum output. A query returns the current level.
EN # EN?	Enable. This will enable or disable the laser. The laser must first be enabled before firing. 0 = Disabled, 1 = Enabled. (Default: 0). A query returns the current enable state.
FL # FL?	Fire Laser. Starts the laser pulsing. 0 = Stop Firing Laser, place laser in idle state, shutter will be closed. 1 = Fire laser, shutter is closed. 2 = Fire laser, shutter is open. A query returns the current firing state.

LS #,###,###,### LS?	Laser Setup. This is a combined command to adjust multiple system parameters at once instead of issuing multiple commands. First Parameter = Select wavelength (1 = IR, 2 = GRN, 3 = UV, 4 = DUV), LS command not available for blend mode Second Parameter = Set Energy Density (0 – 1000), Third Parameter = Set Slit X-axis (0.00 to 2500.00 microns, depends on magnification), Fourth Parameter = Set Slit Y-axis (0.00 to 2500.00 microns, depends on magnification), LS? returns current settings.
PM # PM?	Mode. Sets the laser firing mode, 0 = continuous, 1 = single shot, 2 = burst. (Default: 0). A query returns the currently set mode.
QE # QE?	Qswitch Enable. Enables normal Qswitch operation. 0 – Disables normal operation, 1 – Enables normal operation.
QW # QW?	Q-Switch Wait. The number of diode pulses that the q-switch will wait before activating. A zero will disable the wait.
RR ## RR?	Repetition Rate. This sets the rate at which the laser will fire at. Values are from 1-40 Hz. (Default: 10 Hz). A query will return the current rate.
SW #,### SW?	Select Wavelength & Energy Level. Selects the wavelength to control. Range is 1-4 where 1 = IR (1064nm), 2 = GRN(532nm), 3 = UV(355nm), 4 = DUV(266nm). NOTE: A query will return 5 when in Blend mode (see BL command). If a specific wavelength is not available on the system, and error response will be returned. A query returns the current wavelength being controlled.
SA # SA?	Slit Rotation. Sets the current slit rotation angle. Range is from +45 to -45 degrees. A plus or minus is required to determine angle. (Default: 0). Parameter = degrees*10 (+450 to -450). A query returns the current rotation angle.
SP #,##.##,##.## SP?	Slit Position. First Parameter is Magnification. Sets the current slit X and Y blade position. Values are from 0.00 to 2500.00 microns for both axes depending on magnification. Actual allowed range depends on the objective magnification. Slit range is 0 to 2.5mm, thus the image size range is 0 to 2500/magnification. A query returns the current cut size.
SY # SY?	Sync mode. Sync Output Mode. 0=Off, 1=LD pulse, 2=QSW pulse, 3=LD/QSW, 4=Emission.
UC? UC 0	User Count. This is a user re-settable shot counter. It is a saved count and can be cleared by issuing a 0 parameter following the command.

Turret Commands

TAM #### TAM?	Turret Absolute Move. Send turret to specified position in microns. Queries turret position counter. Returns the position in microns.
TCT?	Query Only. Turret position count.
THM THM?	Turret Home. Homes the turret, resets the position counter and will return to home objective. Query returns 1 if homed.
TNO?	Returns the number of objectives installed.
TOP # TOP?	Turret Objective Position. Move turret to the objective position specified. Parameter = 1-4. Query returns current position.
TRM +/-##### TRM?	Turret Relative Move. Moves relative to the current position in either a positive or negative direction. Query returns current position.
TSC #,##	Save Turret Configuration. Parameter – 1-4,1-200. Saves the current

TSC?	position and magnification at the specified turret position. Value must match current turret position. Query returns current position.
TST	Turret Stop. This stops the movement of the turret.
TSS?	Query Only. Turret Status.

31	30	29	28	27	26	25	24
Reserved	Command Fault	Phase not Initialized	Set if Absolute Velocity exceeds Velocity Window	In Motion	Home Switch is Active	Tracking Window is outside of Tracking Error Limit	Acceleration Limit has been reached
23	22	21	20	19	18	17	16
Velocity Limit has been reached	Latched Drive Fault has Occurred	Reserved	Drive is Currently in a reset Condition	Tracking Warning	Tracking Error	Negative Software Limit Condition	Positive Software Limit Condition
15	14	13	12	11	10	9	8
PWM Outputs Disabled	Motor Brake Activated	Trying to stop Motor	Drive is Disabled by Software	Enable Input Not Active	Negative Limit Switch Active	Positive Limit Switch Active	Voltage Output Limited
7	6	5	4	3	2	1	0
Current Output Limited	Motor Phasing Error	Encoder Feedback Error	Motor Temp Sensor Active	Under Voltage	Over Voltage	Drive Over Temp	Short Circuit Detected

Z-axis Commands

ZCM + or -	Jog +/-. Will continuously move the z axis either positive or negative with respect to the home position. Stage will continue to move until a stop command is issued.
ZCO +-##### ZCO?	Change Offset with Objective Change. Query returns offset for current turret position.
ZHM	Home. Homes the Z-axis.
ZHS #### ZHS?	Home Speed of motor – in µm/s, range is 40µm/s to 5000µm/s. Query returns Home Speed.
ZIS ### ZIS?	Initial Speed of motor - in µm/s, range is 40µm/s to 5000µm/s. Query returns Initial Speed.
ZPH ##### ZPH?	Home Offset. The number of counts that the z-axis will move after homing to the limit sensor. Query returns current setting.
ZRM +-#######	Z relative move. Moves relative to the current position in either a positive or negative direction.
ZSC? ZSC-	Position. Query returns the current position of the stage. A – will zero out the count.
ZST	Z Stop or Cancel. Stops the Z-axis stage movement.

ZSS?		Z-axis Status Query. Query returns two bytes that indicate the status of various system states.					
7	**6**	**5**	**4**	**3**	**2**	**1**	**0**
Reserved	Reserved	Homing	Moving	Direction	Motor Enabled	Limit B	Limit A
15	14	13	12	11	10	9	8
Ignore Focus Step	Decelerate	At Target Speed	Focus Positioning	Back Off	Continuous Move	SC Query	Motor High Speed

Autofocus Commands

AAS		Active Speed in µm/s. Range is 40µm/s to 5000µm/s. Sets the active speed. Note: this will be over-ridden by the high and low speed if in auto-motor mode or the unit is homed. This is not a stored parameter.					
ACL ! ACL?		Calibrate. Objective dependent. Sets the current focus plane. Query returns calibration value.					
ADR ### ADR?		Docking range. Set the docking range window. Stage movement will be at a higher speed when outside this range. Query returns the current value.					
AEN # AEN?		Enable. Enables the autofocus mode. 0 = Off. 1 = On, actively processing focus position, no motor control 2 = On, actively processing focus position, controls z-axis movement. 3 = On, actively processing focus position, controls z-axis movement and uses z axis change offset. Query returns current mode.					
AFL?		Query Only. Focus Level. The current focus level value.					
AFR ### AFR?		Focus Range. The range at which the system will not try to re-adjust focus. Range is 0 to 1000. Query returns current value.					
AFT ### AFT?		Focus Target. When out of the focus range, this is the absolute target it will try to reach. Range is 0 to 1000. Query returns the current value.					
AHS ### AHS?		Focus High Speed in µm/s. Range is 40µm/s to 5000µm/s. Query returns current setting.					
ALS ### ALS?		Focus Low Speed in µm/s. Range is 40µm/s to 5000µm/s. Query returns current setting.					
ASS?		Status Query. Status of the autofocus sensor. Query returns two bytes that indicate the status of various system states.					
7	**6**	**5**	**4**	**3**	**2**	**1**	**0**
Signal Power Too High	Signal Power Too Low	High Sensor Gain	Invalid Data	Auto Focus Enabled	In Docking Range	In Focus Range	In Focus
15	**14**	**13**	**12**	**11**	**10**	**9**	**8**
Area Invalid	Power Invalid	CoM Invalid	Peak Invalid	Intensity Error	EMO Status	Laser Disabled	Auto Motor

Illuminator Commands

IL #,####	Illuminator level. First parameter is the illuminator channel. 0 = Coax, 1 = Slit backlight. The second parameter is the intensity level.

8. Maintenance

Nitrogen Purge

The Laser Head has been factory purged with UHP (Ultra High Purity) dry nitrogen to prevent condensation on the laser optics. If any cover or access screw is removed for any reason, the head should be purged again with UHP nitrogen.

Remove the two nitrogen purge/seal screws on the side of the Laser Head.

Connect 5 psi dry nitrogen to one seal screw hole, using the Schrader valve and #4-40 screw adapter supplied in the Accessories Kit. Flow UHP (Ultra High Purity) dry Nitrogen through the laser head for a minimum of 10 minutes. Replace the screw in the purge hole used as the exit port for the dry Nitrogen. Remove the 4-40 screw adapter and Schrader valve from the laser head. Reinstall the purge/seal screw in the remaining open hole.

Service Procedures

Laser Head Replacement

The following procedure should be followed when replacing the laser head. The laser head is pinned in place so in general only minor realignment is required.

- Turn off all power to the system.
- Remove the front and left side covers.
- There are qty 4 8-32 captive screws that hold the laser mounting plate onto the Laser Optical assembly. These screws are accessible from the left side of the Laser Optical Assembly.
- Unscrew the 4 screws securing the laser to the optical assembly.
- Disconnect the laser cables.
- Carefully remove the laser.
- Install on the new laser by following the prior steps in reverse.
- Check the laser alignment (see Laser Alignment Section).
- Calibrate the energy. (see Energy Calibration Section)

Attenuator Assembly Replacement

The following procedure should be followed when replacing one of the attenuator assemblies. The attenuator assemblies are pinned to insure easy replacement.

- Turn off all power to the system.
- Remove the front Laser Optics Assembly cover
- Disconnect the interconnect cable from the attenuator assembly.

- Unscrew the four screws securing the slit assembly to the LOA plate, while holding the attenuator firmly.
- Carefully remove the attenuator assembly.
- Install the new attenuator. Reconnect cable and power up the system.
- Check the laser alignment (see Laser Alignment Section).
- Calibrate the energy. (see Energy Calibration Section)

Harmonic Mixer & Separator Assembly Replacement

The following procedure should be followed when replacing either of the upper mirror assemblies. The mirror assemblies are pinned to insure easy replacement.

- Turn off all power to the system.
- Remove the Laser Optics Assembly cover
- Unscrew the 3 mounting screws securing the mirror mount to the LOA plate.
- Carefully remove the mirror assembly.
- Install the new mirror assembly by following the prior steps in reverse order.
- Check the laser alignment (see Laser Alignment Section).
- Calibrate the energy. (see Energy Calibration Section)

Beam Conditioner Assembly Replacement

The following procedure should be followed when replacing the beam conditioner assembly. The mirror assemblies are pinned to insure easy replacement.

- Turn off all power to the system.
- Remove the front Laser Optics Assembly cover
- Install the beam conditioner by following the prior steps in reverse order.
- Check the laser alignment (see Laser Alignment Section).
- Calibrate the energy. (see Energy Calibration Section)

Aperture Assembly Replacement

The following procedure should be followed when replacing the slit assembly. The slit assemblies are pinned to insure easy replacement. They are provided pre-calibrated and should have minimal impact on laser energy or alignment.

- Turn off all power to the system.
- Remove the front Laser Optics Assembly cover
- Disconnect the interconnect cable from the aperture assembly.
- Unscrew the four screws securing the aperture assembly to the housing, while holding the slit firmly.
- Carefully remove the aperture assembly.

- Install the new aperture assembly.
- Check the laser alignment (see Laser Alignment Section).
- Calibrate the energy. (see Energy Calibration Section)

Laser Alignment

Aligning the laser to the video system is accomplished with four sets of mirrors: the laser side upper fold mirror assembly, the optical side upper fold mirror assembly, the optical side lower mirror assembly, and the beam combining assembly. The alignment process can be subdivided into two procedures. First aligning the multiple laser beams through the slit, centered and collinear. This is done with the upper two mirror assemblies.

A crosshair alignment tool is provided. The alignment tool can be placed just below the mixer assembly and in the VMU above the lower fold mirror. The crosshairs below the mixer assembly will be at 45° to horizontal. The crosshairs in the VMU will be horizontal/vertical.

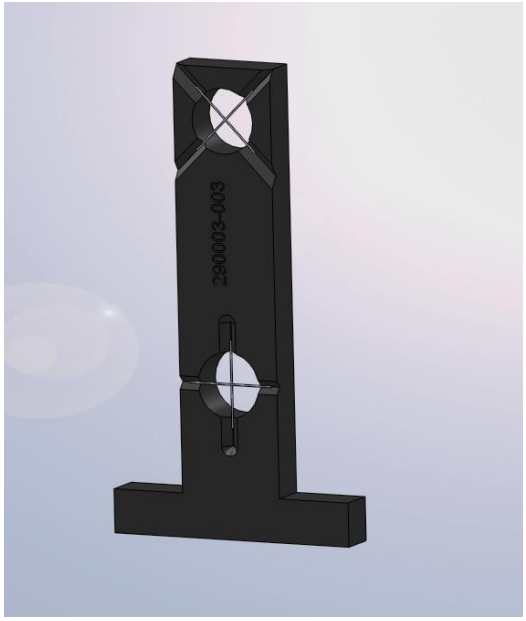

Figure 21 Alignment Tool

- Open the Aperture as wide as possible.
- Select the wavelength and set the energy to a minimum.
- Place a target in front of the 200 mm laser tube lens.
- Fire the laser.
- Use the upper-left separator mirror assembly to center the beam on the slit (or alignment target if using) and use the upper-right mirror assembly (mixer) to steer the beam and keep it on the target (crosshair alignment target in VMU)
- Repeat for both wavelengths.
- The second procedure is to align the collinear beams to the video line of sight. This is done using the optical side lower fold mirror assembly and the beam combiner mirror. The wavelength with the highest magnification objective should be used.
- Select the appropriate objective.

- Select the wavelength and set the energy to a minimum.
- Focus the video on a white target.
- Fire the laser.
- Use the beam combiner to steer the beam onto the center of the screen.
- Use the optical side lower fold mirror assembly to center the beam on the target. The laser beam should be centered in the light from the video illuminator.
- Refocus the objective.
- Repeat steps 5 – 8 until the beam remains centered.

Auto Focus Alignment

The following points should be checked when an Auto Focus module is replaced or if the alignment is in question.
NOTE: Before the Auto Focus can be aligned the objective positions must be set using the information outlined in step 5 under the Turret control section.

In order for the Auto Focus to work properly the output must enter the objective lens aperture correctly. If it does not enter the objective lens on axis, then performance may be reduced. The autofocus fold mirror should be adjusted such that the Auto Focus beam at the entrance of the objective and at some distance away from the entrance should look like the following image.

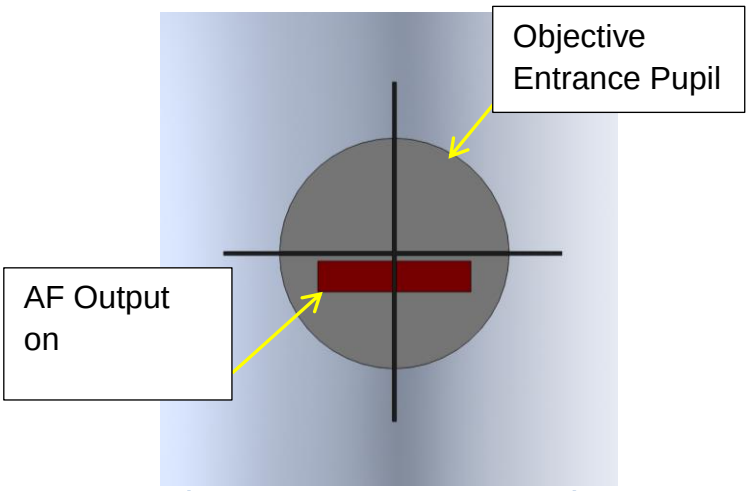

Figure 22 Auto Focus Beam Centering

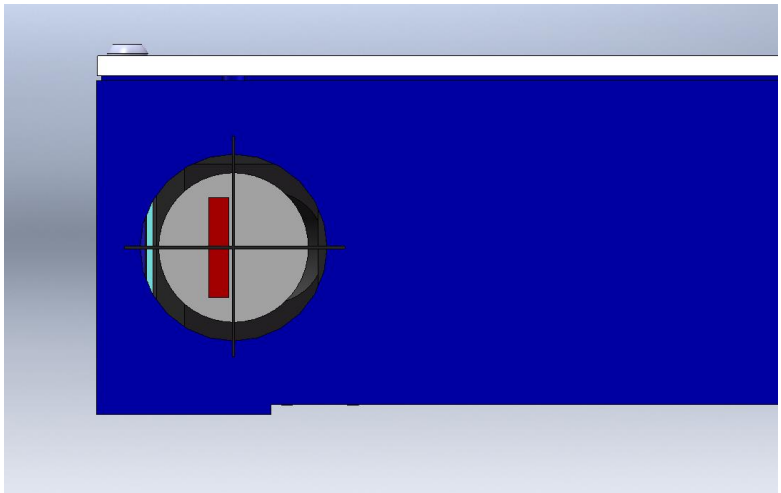

Figure 23 Output of AF910

Be sure the Auto Focus beam does not cross over the centerline of the objective aperture otherwise performance will be compromised.

After the alignment has been verified it can be tested by following the steps outlined below:

- Turn on the LS-615 and start the LS615System software shipped with the system.

- Move the Z-axis stage to both limits and ensure the AF sees both limits:
    - First use the Jog up button to run the stage to the upper limit and ensure the B limit is tripped.
    - Next use the Jog down button to run the stage to the lower limit and ensure the A limit is tripped.
- Home the Z-stage by pressing the appropriate button the LS615System software.
- Move the Z-axis to focus on the sample using a combination of the Jog and Step buttons.
- Calibrate the Auto Focus by pressing the Calibrate button.
- Move the Stage out from focus some distance within the published Capture Range for the objective used.
- Put the Auto Focus in Auto Motor mode by checking the Auto Z-Axis box. Ensure that focus is found.

9. Trouble-Shooting

The LS-615 control electronics are designed to control the laser and warn the user of problems that may occur. The microprocessor-based system monitors the laser system and automatically shuts down if a fault occurs. Software limits have been factory selected to protect the laser system against electrical and optical damage.

No Laser Output

Check Fault and Interlock Conditions: Query status information using commands listed in the command set. Refer to status to determine if a fault or interlock conditions exists.

Check Cables: With the main power OFF and unplugged, check all electrical connections between the Laser Optics Assembly and the Laser Power Supply. Make sure all connections are secured. If any of the cables are not installed properly, the system will not function.

Check Shutter Position: The shutter is manually controlled and is located on the side of the laser head. When the shutter handle is horizontal, the shutter is open.

Check Energy Setting: Refer to the efficiency data supplied in the Data Summary Sheet and make sure the input energy is not set below the lasing threshold. Correct if necessary.

Check Q-Switch Settings: Verify that the Q-Switch is enabled.

Energy is Low

Resonator Misaligned: If beam quality has degraded, it may suggest that the resonator needs realignment. Contact manufacturer for more details.

Contact the manufacturer for any repair actions necessary beyond those described in this manual. Attempts to adjust, repair or replace any portion of the laser system may cause additional problems and void the warranty.

10. Specifications

LS-615 Laser Specifications	Specification	Notes
Jewel Laser		Sealed, conductively cooled resonator integrated with drive and control electronics.
Wavelength	1064 nm, 532 nm, 355 nm, and 266 nm	Beams are independently controlled, collinear, and coaxial with video system.
Rep Rate	20 Hz, 40 Hz Burst of 10 seconds	
Energy per Pulse (Typical)		
1064 nm	≥ 1.2 mJ	Energy is specified at the output of the LS-615 system and does not include losses from customer supplied optics. If required energy specification can be increased.
532 nm	≥ 1.2 mJ	
355 nm	≥ 0.4 mJ	
266 nm	≥ 0.4 mJ	
Pulse Width		
1064 nm	≤ 12 ns	Full width half maximum
532 nm	≤ 12 ns	
355 nm	≤ 12 ns	
266 nm	≤ 12 ns	
Pulse to Pulse Stability		**full aperture 50% 25% 10%**
1064 nm	±1.5% ±2.5% ±4.0% ±6.0%	RMS pulse-to-pulse stability for 98% of pulses after warm-up
532 nm	±2.0% ±3.0% ±4.5% ±6.5%	
355 nm	±3.0% ±4.0% ±6.0% ±8.0%	
266 nm	±3.0% ±4.0% ±6.0% ±8.0%	
Pulse to Pulse Variance		**full aperture 50% 25% 10%** %(max-min)/(2*mean)
1064 nm	≤ 4.0% ≤ 7.5% ≤ 10% ≤ 12%	Pulse-to-pulse variance for 98% of pulses after warm-up, with a 100 shot sample window.
532 nm	≤ 5.0% ≤ 8.0% ≤ 11% ≤ 13%	
532 nm	≤ 6.0% ≤ 10.0% ≤ 13% ≤ 15%	
266 nm	≤ 5.0% ≤ 8.0% ≤ 11% ≤ 13%	
Diode Lifetime	> 500,000,000 pulses	

Attenuator Specifications	Specification	Notes
Attenuation Range	0 to 100%	Attenuator is calibrated and linearized to provide the specific energy.
Accuracy	±0.5%	
Resolution	0.20%	
Tact Time	≤ 1.0 s	Full range of travel.
Initialization	≤ 6.0 s	From power-up.

X-Y Slit	Specification	Notes
Range	0 to 2.5 mm 0 to 4 mm (optional)	0 to 50 µm with 50x objective
Accuracy	±(25 um + 0.01 * size)	
Resolution	25 um	0.5 µm with 50x objective
Tact Time	≤ 1.0 s	Full range of travel.
Initialization	≤ 6.0 s	From power-up.

Theta Slit	Specification	Notes
Rotation Range	-45 to +45 degrees	
Accuracy	± 1.0 degree	
Resolution	0.5 degrees	
Tact Time	≤ 1.0 s	Full range of travel.
Initialization	≤ 6.0 s	From power-up.

Turret	Specification	Notes
Objective Positions	2 to 6 positions	Specified at the time of order
Repeatability	± 0.2 µm	
Resolution	0.1 um	
Tact Time	≤ 1.0 s	Full range of travel.
Position to position	≤ 600 ms	Any objective position
Initialization	≤ 6.0 s	From power-up.

Z-Axis	Specification	Notes
Resolution	0.05 um	
Repeatability	± 0.1 um	
Tact Time	≤ 1.0 s	Full range of travel.
Initialization	≤ 6.0 s	From power-up.
Travel Range	6 mm	

AutoFocus	Specification	Notes
	5x 10x 20x 50x 100x	Nominal values measured with Mitutoyo Infinity corrected objective. Values may differ depending on the objective.
Focus Repeatability (µm)	± 2.5 ± 0.5 ± 0.4 ± 0.3 ± 0.2	
Focus Accuracy (µm)	± 5.0 ± 1.0 ± 0.8 ± 0.5 ± 0.3	
Resolution (µm)	1.0 0.5 0.2 0.1 0.06	
Linear Range (µm)	± 400 ± 200 ± 100 ± 40 ± 15.	
Capture Range (µm)	± 2000 ± 1000 ± 500 ± 200 ± 30.	

System	Specification	Notes
Size		
Laser Head	300mm x 700mm x 110mm	
Power Supply	5.25", 19" Rack Mount.	
Weight		
Laser Head	18 kg	
Power Supply	4.8 kg	
Operating Voltage	100 - 250 VAC, 50/60 Hz	
Operating Power	< 100 watts	
Computer Interface		
Standard	RS-232	
Optional	USB, Ethernet	
Service Interface		
Optional	USB	Separate service port allows access to the Built-In-Test functions without the need to disconnect any cables. Using the wireless, Bluetooth interface eliminates the need to physically access the laser.
Optional	Bluetooth	
Notes	1. System does not include objective lenses. 2. System includes a standard 2m cable to interface from laser head to power supply.	

11. Cables and Connection Pinout

Umbilical Cable

Laser and Stage Power Cable

Connector on Power supply side is Norcomp Inc. 680M7W2103L201 or Equivalent
Connector on LS-615 Payload side is Norcomp Inc. 680S7W2203L201 or Equivalent

Signal	Pin (Cable is 1:1)	Recommended AWG
Stage Power (+60 – 90 VDC)	A1	>=18 AWG
Stage Ground	A2	>=18 AWG
Laser Ground	1,2	>=24 AWG
Laser Power +36 VDC (+28 – 48 VDC)	3,5	>=24 AWG
Stage Earth Ground	5	>=24 AWG
Notes:	1. Shield should encompass all wires and connect to both hoods 2. Stage power, ground, and earth ground should be grouped together 3. Laser power and ground should be grouped together	

Control Signal Cable

Connector on Power supply side is Norcomp Inc. 171-025-103L001 or Equivalent
Connector on LS-615 Payload side is Norcomp Inc. 172-E25-203R001 or Equivalent

Signal	Pin (Cable is 1:1)	Recommended AWG
Logic Power (+15 VDC)	1,2	>=24 AWG
Logic Ground	14,15	>=24 AWG
Spare Signals	3,16	>=24 AWG
Status 1 (Ground)	5 (18)	>=24 AWG
Status 2 (Ground)	4 (17)	>=24 AWG
Interlock (Ground)	6 (19)	>=24 AWG
EMO Switch (Ground)	7 (20)	>=24 AWG
Sync (Ground)	8 (21)	>=24 AWG
Trigger 1 (Ground)	10 (23)	>=24 AWG
Trigger 2 (Ground)	9 (22)	>=24 AWG
RS-232 RTS	11	>=24 AWG
RS-232 CTS	24	>=24 AWG
RS-232 RX	12	>=24 AWG
RS-232 Ground	25	>=24 AWG
RS-232 Tx	13	>=24 AWG
Notes:	1. Shield should encompass all wires and connect to both hoods 2. Group power wires 3. Group RS-232 wires 4. Group others as shown	

Camera Connection

An external connection to the camera is supplied on the payload to allow for easy of set-up. The supplied connector is a SDR 26 position Camera Link connector (3M 12226-1150-00FR or Equivalent). Power is supplied to the camera internal to the payload.

12. Customer Service

Warranty

The manufacturer warrants the lasers it produces to be free from defects in materials and workmanship for one year following the date of shipment. Laser optics are warranted for 90 days following the date of shipment provided that operating instructions are properly followed. This warranty is limited to the original purchaser of the laser and is not transferable.

During the one year warranty period, we will repair or replace, at our option, any defective products or parts at no additional charge, provided that the product is returned, shipping prepaid, to Quantum Composers. All replaced parts and products become the property of the manufacturer.

This warranty does NOT extend to any lasers which have been damaged as a result of accident, misuse, abuse (such as use of incorrect input voltages, improper or insufficient ventilation, faulty lamp replacement, failure to follow the operating instructions provided by the manufacturer, or other contingencies beyond our control), or as a result of service or modification by anyone other than the manufacturer.

Feedback

We welcome your feedback in regard to the use and performance of our laser system. Product improvements and refinements come about from these contacts; continually improve our product reliability, performance and customer satisfaction.